WDS Series

Steam Moisture Separator

Watson McDaniel reserves the right to change the designs and/or materials of its products without notice.
©2004 Watson McDaniel Company

Revised 9/2004

Model	WDS	
Body Material	Cast Iron	Carbon Steel
Sizes	3/4", 1", 1¼", 1½", 2", 2½", 3", 4"	1", 1¼", 1½", 2", 2½", 3", 4", 5", 6", 8", 10", 12"
Connections	NPT, 125# Flanged	NPT, SW, 150# & 300# Flanged
PMO Max. Operating Pressure	250 PSIG	300 PSIG (NPT & SW)
Pressure/ Temperature Rating	NPT 250 PSIG @ 450˚F 125# FLG 150 PSIG @ 450˚F	NPT, SW 300 PSIG @ 650˚F 150 # FLG 150 PSIG @ 450˚F

TYPICAL APPLICATION

The **WDS Series** Separators are used for the removal of entrained liquid or solids from steam. Effective in applications were the system has an entrained liquid flow rate of up to 40% by weight of the units flow capacity.

HOW IT WORKS

Moisture-laden steam enters the inlet of the separator where it is deflected in a centrifugal downward motion. The entrained moisture is separated out by reduction in velocity. Separated liquid then falls below the Vortex containment plate where it cannot be re-entrained. Dry, clean steam then flows upward and exits through the outlet of the separator.

FEATURES

- **High efficiency: 99% of all particles 10 microns and larger**
- **Minimum pressure drop**
- **Gauge ports on 3" & 4" cast iron units**
- **Code constructed**

SAMPLE SPECIFICATION

Steam Moisture Separator shall be "T" style for horizontal piping installations. Separator to be code constructed in cast iron or carbon steel and available in FNPT and flanged connections.

INSTALLATION

The WDS Steam Moisture Separator must be installed in a horizontal run of pipe. Exercise standard piping and structural practices when installing this unit. Proper drainage of the separator utilizing a float and thermostatic steam trap is essential for proper operation.

MATERIALS

WDS Cast Iron Model	All Parts Cast Iron
WDS Carbon Steel Model	All Parts Fabricated Carbon Steel

CAPACITIES – Steam – (lbs/hr)

Size	Operating Pressure (PSIG) 5	10	25	50	100	150	200	250	300	400	450	500
1"	192	219	289	384	536	661	772	872	964	1132	1210	1284
1¼"	305	348	459	609	851	1050	1225	1384	1531	1797	1921	2038
1½"	434	495	653	868	1211	1495	1744	1970	2179	2559	2734	2902
2"	769	877	1156	1536	2143	2646	3087	3487	3857	4529	4839	5136
2½"	1220	1391	1834	2437	3401	4199	4900	5535	6121	7188	7680	8151
3"	1912	2181	2876	3821	5333	6583	7682	8677	9597	11269	12041	12779
4"	3183	3632	4787	6362	8878	10959	12788	14446	15977	18760	20046	21274
5"	4823	5501	7252	9637	13449	16603	19373	21884	24203	28420	30367	32229
6"	7465	8516	11226	14917	20818	25699	29988	33874	37464	43992	47006	49887
8"	12444	14196	18713	24867	34704	42840	49989	56468	62452	73334	78359	83161
10"	19376	22104	29137	38720	54036	66705	77836	87924	97241	114186	122009	129487
12"	28560	32580	42947	57071	79648	98320	114728	129597	143331	168306	179836	190859

428 Jones Boulevard • Limerick Airport Business Center • Limerick PA • 19468 • Tel: 610-495-5131 • Fax: 610-495-5134
www.watsonmcdaniel.com

WDS Series

Steam Moisture Separator

Revised 9/2004

CAST IRON

WDS CAST IRON NPT MODEL DIMENSIONS – inches / pounds

Size (NPT)	A	B	C	Vent NPT	Drain NPT	Gauge Centers G	Weight
3/4"	5 1/2	10 1/8	5 3/4	1/4	3/4	N/A	23
1"	6	10 1/8	6 3/4	1/4	1	N/A	26
1 1/4"	6	10 3/8	7	1/4	1	N/A	30
1 1/2"	7 1/4	13 1/8	8 1/8	1/4	1	N/A	45
2"	8 1/8	15 5/8	8 1/2	1/4	1	N/A	50
2 1/2"	12	18 1/4	11 3/8	1/4	1 1/4	N/A	95
3"	11	18 1/4	11 3/8	1/4	1 1/4	3 1/2	90

WDS CAST IRON FLANGED MODEL DIMENSIONS – inches / pounds

Size (Flanged)	A	B	C	Vent NPT	Drain NPT	Gauge Centers G	Weight
2"	10 1/2	13 3/4	8 1/2	1/4	1	N/A	50
3"	14	16	11 3/8	1/4	1 1/4	4 3/4	95
4"	15 7/8	19 3/8	14	1/4	1 1/4	5 3/4	195

CAST IRON WDS

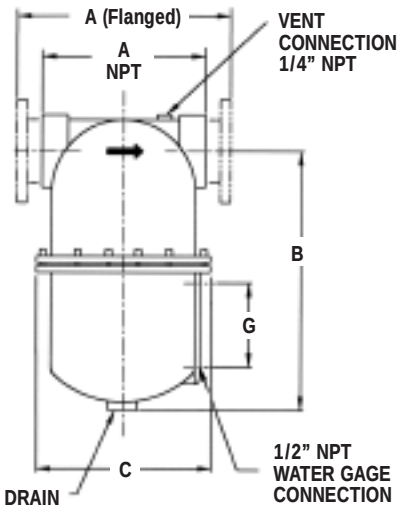

CARBON STEEL

WDS CARBON STEEL MODEL DIMENSIONS – inches / pounds

Size	NPT, SW A	150#, 300# FLG A	B	C	D	G	NPT Drain Std.	NPT Drain Opt.	Weight NPT, SW	Weight 150# FLG	Weight 300# FLG
1"	6 3/8	10 1/2	10 1/2	12	5 9/16	Opt.	1	1 1/2	29	33	35
1 1/4"	6 3/8	10 1/2	10 1/2	12	5 9/16	Opt.	1	1 1/2	30	35	37
1 1/2"	7 5/8	11 1/2	12 1/2	14	6 5/8	Opt.	1	2	55	50	56
2"	7 7/8	11 1/2	12 1/2	14	6 5/8	Opt.	1	2	57	55	59
2 1/2"	–	16	15	22	8 5/8	5 3/4	1	2	–	100	110
3"	–	18	18	26	10 3/4	5 3/4	1 1/2	2 1/2	–	140	150
4"	–	20	22	31	12 3/4	5 3/4	1 1/2	2 1/2	–	195	220
5"	–	22	26	36	14	7 7/8	1 1/2	2 1/2	–	230	290
6"	–	24	30	41	16	7 7/8	1 1/2	2 1/2	–	350	380
8"	–	28	37	50	18	7 7/8	2	3	–	475	610
10"	–	34	55	70	24	7 7/8	2	3	–	780	1180
12"	–	38	58	75	28	7 7/8	2 1/2	4	–	940	1510

*** 1" - 2" units are Cast Steel. 2 1/2" and up are Fabricated Steel.**
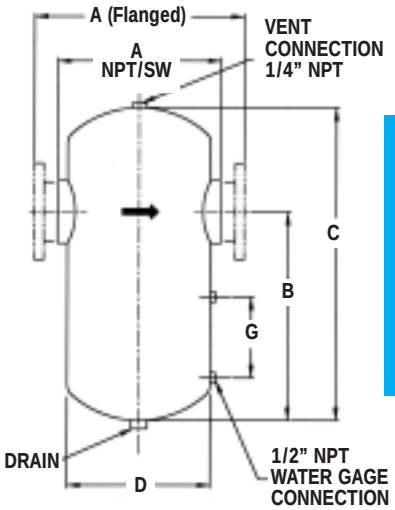
CARBON STEEL WDS